SIOUX STEEL COMPANY

GRAIN CONDITIONING EQUIPMENT

Fans, Heaters & Controls

www.siouxsteel.com • info@siouxsteel.com • 1-800-557-4689

GRAIN CONDITIONING EQUIPMENT

SIOUX STEEL COMPANY

ENGINEERING PROGRESSIVE SOLUTIONS SINCE 1918

What makes Sioux Steel Company unique?

- Products with the longest warranties in the industry.
- Committed to helping find the right solution for each customer.
- Pioneers of building stronger products with the highest ratings.
- Products that have proven themselves since 1918.
- 5th generation, family-owned company.

SIOUX STEEL COMPANY®

Innovative Solutions Manufactured By A Family-Owned Company With A Century's Worth Of Experience

Contents

Axial Fans 4-5
Centrifugal Fans 6-7
High Speed Centrifugal Fans 8-9
VFD Fan Control 10
Heaters 11

For more information about Sioux Steel
COMMERCIAL & FARM BINS
visit us online at
www.siouxsteel.com

More Airflow for Less Money

Sioux Steel Company is committed to designing and manufacturing the best fans for your needs. Sioux Steel's Fans are #1 in the industry.

Fans are the key to a successful drying and aeration system. That's why our fans come with reliability and dependability built right in.

Solutions for Today and Tomorrow

AXIAL FANS

BENEFITS & FEATURES

High Efficiency for Drying or Aeration

Sioux Steel's cast aluminum airfoil blade ensures economical performance and maximum airflow at lower static pressures. The fan's precision-balanced blades achieve vibration-free operation. The hub on the blade prevents backflow at higher static pressures. The housing is designed to provide close tip clearance for maximum airflow. These design features result in the most efficient axial fan on the market today. Proven for maximum performance, our axial fans have been repeatedly tested to ensure they meet Sioux Steel's quality standards.

Features

- Plated screen guard is bolted over the air intake to ensure your safety.
- High quality motors for heavy duty dependable fan operation year after year.
- Axial Fans carry a **2 YEAR WARRANTY.**

3500 RPM

Voltage	*115V*	*208-230V*				*460V*	
Size in Inches (hp)	1-Phase	1-Phase		3-Phase		3-Phase	
	Controls	Controls	Less Controls	Controls	Less Controls	Controls	Less Controls
12 (0.75 hp)	S168668						
12 (1 hp)	SSA-12001				SSA-121003-230		SSA-121003-460
14 (1 hp)	S168669				SSA-141003		SSA-142003
18 (3 hp)		S161893	S178587	S176351-280	SSA-183003	S176351-460	SSA-183003
24 (5-7 hp)		S203736	S203753	S203749	S203747	S203748	S203747
24 (7-10 hp)		S203752	S203751	S203757	S203756	S203758	S203756
28 (10-15 hp)		S203762	S203761	S203765	S203764	S203766	S203764
42 (30 hp)					S194581		S194581

USE ALONE OR WITH HEATERS

Sioux Axial Fans are engineered for grain drying at lower static pressures. Our fans easily adapt to heaters or can be used alone for natural air drying or for pressure aeration.

Learn more about our heater options on page 11.

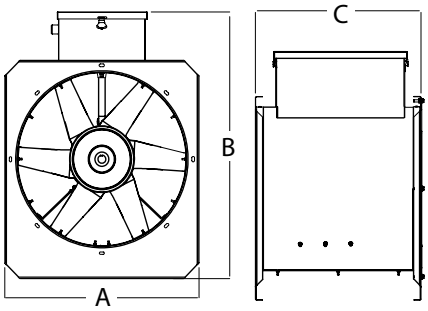

3500 RPM AXIAL FAN DIMENSIONS (INCHES)

Size	18	24	28
A	23	27¾	31¾
B	24	38	41½
C	18	24½	24½

3500 RPM

Spread-All 12" Axial (0.75 hp)		Spread-All 18" Axial (3 hp)		24" Axial (5 to 7.5 hp)		24" Axial (7.5 to 10 hp)		28" Axial (10 to 15 hp)	
Static Pressure	CFM	Static Pressure	CFM	Static Pressure	CFM	Static Pressure	CFM	Static Pressure	CFM
0.5	2115	0.5	5980	0	12232.20	**0**	13366.78	**0**	16777.43
1	1850	1	5600	1	11089.94	1	12384.16	1	13810.56
1.5	1050	1.5	5400	2	9859.94	2	11248.16	2	12151.66
2	480	2	4950	3	7617.95	3	9782.89	3	9823.36
2.5	240	2.5	4600	4	4305.80	4	6279.37	4	7050.85
		3	3200	5	2319.57	5	2940.88	5	4903.36
		3.5	2300					6	3935.66
		4	1800					7	2829.56
		4.5	1200						

12" Axial
(0.75 hp)

24" Axial
(7.5-10 hp)

28" Axial
(10-15 hp)

SIOUX STEEL
Fans & Heaters Are Known For
LONGEVITY

Sioux Steel offers a
2 YEAR LIMITED WARRANTY ON ALL FANS AND HEATERS.

This warranty comes standard on every fan and heater; there is no additional cost for this benefit. No matter the size, Sioux fans and heaters stand out as the best performing products in the industry!

CENTRIFUGAL FANS

BENEFITS & FEATURES

Quality Built Right In

Manufactured with heavy duty 11 gauge side rails, resulting in significantly less vibration for a more stable platform which adds longevity to the life of the fan. All Centrifugal Fans are bench-tested prior to shipping in order to ensure that our customers are getting a high quality product that works properly from day one.

Features

- Fan blades are solid welded, not stitched for longer life of the fan.
- Adjustable legs on fans allow easy leveling and support while giving more flexibility for adjusting to inconsistencies in a concrete pad.
- Special airfoil blades move more air due to the backward curved, non-overloading design.
- Fan wheels are statically and dynamically balanced for smooth, trouble-free operation.
- Centrifugal Fans and heaters carry a **2 YEAR WARRANTY.**

1750 RPM CENTRIFUGAL FAN DIMENSIONS (INCHES)

hp	Phase	A	B	C	D	E	F	G	H	I	J	K	L	M	N	P	R
5	1 or 3	36		38	43 1/4	20	15	32 1/4	12	43 3/4	19 1/4	28 5/8			23 3/16	32 1/2	
7.5	1 or 3	36	24 1/4	41 3/4	50 1/2	27 3/4	16 1/2	36 1/4	12	43 3/4	19 1/4	28 5/8	27 3/4	20 7/8	23 3/16	32 1/2	32 7/8
10	1 or 3	36	24 1/4	41 3/4	50 1/2	27 3/4	16 1/2	36 11/16	12	43 3/4	19 1/4	28 5/8	29 3/4	20 7/8	23 3/16	32 1/2	32 7/8
15	1 or 3	36	25 1/4	41 3/4	50 1/2	27 3/4	18	40 3/4	12	43 3/4	19 1/4	28 5/8	29 3/4	22 3/8	23 3/16	32 1/2	32 7/8
20	3	36	25 1/4	48 7/16	59 7/16	33	19 1/8	43	12	43 3/4	20 1/4	34	33 5/8	23 1/2	25 1/4	37 /34	38
25	3	36		48 3/8	59 3/8	33	21 7/8	45 5/8	12	43 3/4	20 1/4	34	35 1/8	26	25 1/4	37 3/4	38 1/8
30	3	83 1/2		55 7/8	64 1/2	33 1/8	21 1/4	44 5/8	12	82 1/2	21 5/16	33 1/8	38 3/8	25	31 5/8	36 1/2	36 3/8
40	3	83 1/2		55 7/8	64 1/2	33 1/8	23 11/16	50 7/8	12	82 1/2	23 7/16	33 1/8	37 1/4	27 3/8	31 5/8	36 1/2	36 3/8
50	3	83 1/2		55 7/8	64 1/2	33 1/8	25 1/4	52 7/16	12	82 1/2	25 5/16	33 1/8	37 1/4	29	31 5/8	36 1/2	36 3/8

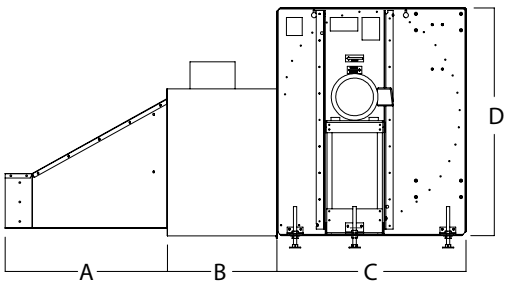

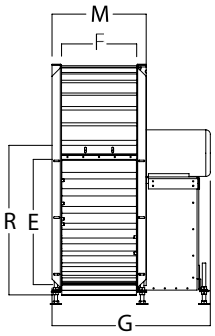

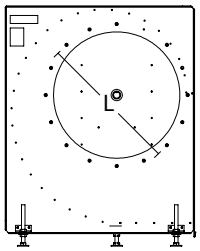

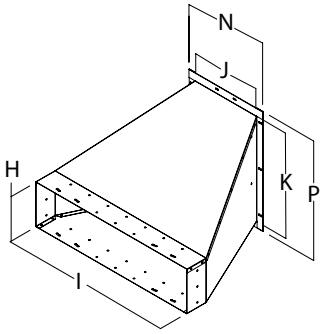

For dimensions on 575V fans, contact our Customer Service Team at 1-800-557-4689.

1750 RPM LOW SPEED FAN PERFORMANCE (CFM)

hp	Static Pressure (Inches H_2O)															
	0	1	2	3	4	5	6	7	8	9	10	11	12	13	14	15
5	8337	7545	6863	5912	5662	3249										
7.5	9074	7938	6934	5765	4445	1329										
10	11981	11189	10337	9511	8673	7739	6662	5507	4538							
15	15526	14490	13378	12237	11238	10497	9901	8928	6474							
20	18534	17505	16516	15538	14554	13555	12523	11431	10231	8845	7160					
25	22711	21764	21084	20076	18706	17260	16097	15939	14905	13714	9982					
30	24310	23227	22518	21838	21002	19949	18702	17339	15949	14603	13315	12002	10457	8304		
40	29013	28617	27443	26152	25013	24012	22957	21588	19686	17180	14259	11476				
50	32799	31874	30617	29313	28054	26797	25415	23752	21674	19125	16176	13086	10346			

1750 RPM LOW SPEED

hp	1750 RPM (Standard Low Speed)						
	208V-230V				460V		575V
	1-Phase		3-Phase		3-Phase		3-Phase
	Controls	Less Controls	Controls	Less Controls	Controls	Less Controls	Less Controls
5	SSA-CF501	SS-CF501LC	SSA-CF503-230	S226362	SSA-CF503-460	S226362	
7.5	S208059	S208056	S208057	S208055	S208058	S208055	
10	S208064	S208061	S208062	S208060	S208063	S208060	S232299
15	S208184	S208185	S208069	S208068	S208070	S208068	S231285
20			S208075	S208074	S208076	S208074	S232300
25			S203602	S203601	S203603	S203601	S232301
30			S203608	S203607	S203609	S203607	S232330
40				S208092	S208093	S208092	
50				S208095	S208096	S208095	

Control boxes are available for 575V fans, but do not come standard.

5-15 hp Centrifugal

20-25 hp Centrifugal

30-50 hp Centrifugal

MAXIMIZE EFFICIENCY

Add a Variable Frequency Drive (VFD) Fan Control to your centrifugal fans to maximize efficiency.

Learn more about the VFD on page 10.

HIGH SPEED CENTRIFUGAL FANS

High Speed Fans

In addition to Axial and Centrifugal Fans, Sioux Steel also manufactures High Speed Centrifugal Fans (3500 RPM). These fans use an innovative design to increase airflow which boosts fan performance, as well as saves time and money.

The specialized design of our High Speed Centrifugal Fans make them ideal for small grain aeration, deep grain depths, in situations with high static pressure, tall tanks, and in small tanks with high resistance to airflow.

Features

- Enclosed motor
- Optimal for use on small grains and situations where static pressure is high.
- High Speed Centrifugal Fans carry a **2 YEAR WARRANTY.**

3500 RPM CENTRIFUGAL FAN DIMENSIONS (INCHES)

hp	A	B	C	D	E	F	G	H
20	38	43 3/4	23 5/8	24 3/8	11 1/2	15 1/4	34 1/2	26 1/16
30	38	43 3/4	23 5/8	24 3/8	13 1/16	13 1/16	36	26 1/16
40	38	43 3/4	23 5/8	24 3/8	14 7/8	14 7/8	37 7/8	26 1/16
50	42	48	28 1/16	28 1/16	15	15	38	29

COMMERCIAL FANS

Sioux Steel High Speed Centrifugal Fans are designed exclusively for use on commercial grain bins. To learn more about complete grain systems, visit *www.siouxsteel.com.*

SHUTTER ASSEMBLIES

Shutter assemblies are available when incorporating multiple fans on a single bin.

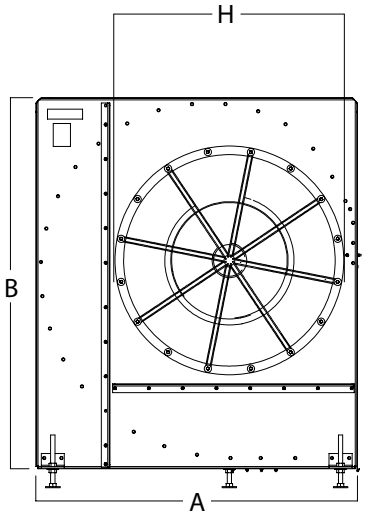

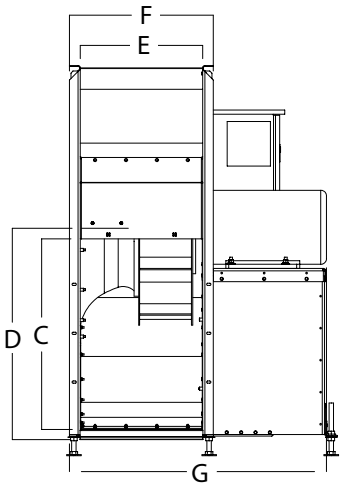

3500 RPM HIGH SPEED FAN PERFORMANCE (CFM)

hp	Static Pressure (Inches H_2O)											
	0	2	4	6	8	10	12	14	16	18	20	22
20	8772	8486	8043	7557	7088	6652	6231	5789	5286	4686	3977	3177
30	12764	12016	11683	11277	10637	9826	9020	8393	8011	7721	7041	5047
40	16465	15432	15184	14857	14128	13051	11884	10916	10301	9887	9041	6485
50	19648	18936	18342	17760	17129	16424	15647	17816	13954	13082	12209	11321

3500 RPM HIGH SPEED

hp	230V	460V
	3-Phase	3-Phase
	Less Controls	Less Controls
20	S208142	S208142
30	S208143	S208143
40		S208144
50		S208145

High Speed Centrifugal Fans are optimal for small grains including:

- Canola
- Wheat
- Popcorn
- Millet
- Rice
- Milo
- Sunflowers

VFD FAN CONTROL

BENEFITS & FEATURES

Variable Frequency Drive Fan Control

Sioux Steel is the only company to offer an option like the Variable Frequency Drive (VFD) Fan Control. The motor management of the VFD Fan Control is designed for maximum gain and efficiency. This high/medium/low speed control box is UL/cUL listed.

Features

- Panels will function in any type of climate since each one is independently heated and cooled.
- Designed to interlock with heater units to ensure the fan is running prior to activating the heater.
- Uses an efficient, durable, low cost 3 phase motor.
- Adjustable amperage and soft start can help to reduce energy costs.
- VFD Fan Control carries a **2 YEAR WARRANTY**.

CENTRIFUGAL - VFD

Fan hp	Incoming Voltage	Incoming Phase	Fan Less Control	VFD Control Box
10	208-230	1	S208060	S203553
		3		S203554
	460			S203555
15	208-230	1	S208068	S203556
		3		S203557
	460			S203558
20	208-230	1	S208074	S203559
		3		S203560
	460			S203561
25	208-230	1	S203601	S203562
		3		S203563
	460			S203564
30	208-230	1	S203607	S203565
		3		S203566
	460			S203567
40	460	3	S208092	S203568
50	460	3	S208095	S203569

MOTORS

Tested for Maximum Performance

Our highly trained engineers test motor amperage and temperature under long-term, maximum-load conditions to ensure that the motors will stand up under tough operating conditions. All Sioux Steel Fans are powered by motors that are totally enclosed fan cooled which offers a wide variety of benefits. These motors are not only more efficient, but also more protected from the elements such as rain, dust, and rodents. TEFC motors pulls air over the motor vs pulling air into the motor.

International Protection Ratings
TEFC: 43 *ODP or OPSB: 22*

HEATERS

FEATURES & SPECIFICATIONS

High & Low Temperature Heaters

Sioux Steel offers high and low temp heaters for axial and centrifugal fans with either a natural gas or propane fuel source. High temp heaters are ideal for high moisture grain drying applications and are typically used in combination with stirring devices. Air tubes are also available to help reduce condensation on the sidewalls in bins utilizing high temp heaters.

Low temp heaters are a great insurance policy for assisting with moisture removal in natural air drying bins during seasons with high humidity. For bins with multiple heaters, we offer a dual thermostat control that keeps the heaters working together instead of against each other.

AXIAL HEATERS

Part #	Diameter	Description	BTU Range	Weight
S17286	24″	LP Liquid Thermostat Control	2.0 M BTU/HR	170 lbs.
S17623	24″	LP Vapor Thermostat Control	2.0 M BTU/HR	170 lbs.
SCH24N-T	24″	NG Thermostat Control	1.6 M BTU/HR	170 lbs.
S17285	24″	LP Liquid Modulating Valve	2.0 M BTU/HR	170 lbs.
S27603	24″	LP Vapor Modulating Valve	2.0 M BTU/HR	170 lbs.
S20589	24″	NG Modulating Valve	1.6 M BTU/HR	170 lbs.
S17288	28″	LP Liquid Thermostat Control	2.0 M BTU/HR	179 lbs.
S27608	28″	LP Vapor Thermostat Control	2.0 M BTU/HR	179 lbs.
S27282	28″	NG Thermostat Control	1.6 M BTU/HR	179 lbs.
S17287	28″	LP Liquid Modulating Valve	2.0 M BTU/HR	200 lbs.
S27607	28″	LP Vapor Modulating Valve	2.0 M BTU/HR	200 lbs.
S20396	28″	NG Modulating Valve	1.6 M BTU/HR	200 lbs.

CENTRIFUGAL HEATERS

Part #	hp	Description	BTU Range	Weight
S17518	7.5-15	LP Liquid Thermostat Control	2.7 M BTU/HR	111 lbs.
S17839	7.5-15	NG Thermostat Control	2.2 M BTU/HR	111 lbs.
S17520	7.5-15	LP Liquid Modulating Valve	2.7 M BTU/HR	111 lbs.
S27610	7.5-15	NG Modulating Valve	2.2 M BTU/HR	111 lbs.
S22453	20	LP Liquid Thermostat Control	3.7 M BTU/HR	125 lbs.
S19999	20	NG Thermostat Control	2.2 M BTU/HR	125 lbs.
S17630	20	LP Liquid Modulating Valve	3.7 M BTU/HR	125 lbs.
S208987	20	NG Modulating Valve	2.2 M BTU/HR	125 lbs.

SUPER LOW TEMP HEATERS (10-30 DEGREE TEMP RISE)

Part #	Diameter	Description	BTU Range	Weight
S20350	24	LP Vapor Thermostat Control	.5M BTU/HR	170 lbs.
S27423	24	NG Thermostat Control	.4 M BTU/HR	170 lbs.
S20351	28	LP Vapor Thermostat Control	1.0 M BTU/HR	195 lbs.
S22556	28	NG Thermostat Control	.8 M BTU/HR	195 lbs.
S187794		Centrifugal Fan Adapter Kit*		10 lbs.

*Mounting Kit mounts heater # 20351 to 7.5-50HP Sioux Centrifugal Fan (heater mounts to air inlet)

Heater Control Options

- ***High-Low Continuous Flame*** Allows for more uniform temperature as it cycles between higher and lower gas pressures.
- ***Modulating Valve*** Provides constant temperature control by continuously regulating flame.
- ***Thermostat*** Burner cycles on and off. This option offers average efficiency.

SIOUX STEEL COMPANY®

196 ½ E. 6th St. • Sioux Falls, SD • **1-800-557-4689** • www.siouxsteel.com

AG PARTS DIRECT .com

SHOP ONLINE!

Search local dealerships or buy direct online.
MSRP product pricing featured along with
additional product information.

www.agpartsdirect.com

19 SINCE 18

Since 1918, Sioux Steel Company is now in its fifth generation as a family-owned company. Based in Sioux Falls, South Dakota, we know the agricultural industry and know that you need high-quality, dependable products. Our mission continues to be not only to satisfy our customers, but we want them to be ***delighted*** to do business with us.

BBB ACCREDITED BUSINESS
A+ RATING

Interested in working for Sioux Steel Company? Scan this QR Code with your smartphone to e-mail us for our current employment opportunities.